PRODUCT GUIDE

August 2021

AUSTRALIA'S #1 LADDER BRAND

BAILEYLADDERS.COM.AU

THE PUNCHLOCK® ADVANTAGE

AUSTRALIA'S #1 LADDER BRAND

Bailey's Professional range of ladders are manufactured using our Punchlock® construction technology. Combined with our unique double hollow tread design, this gives the distinct advantages of strength, stiffness and durability unmatched by riveted ladders.

PUNCHLOCK®
SUPER STRONG

- 66% stronger than conventional riveted type ladders
- Increased strength and durability

DOUBLE HOLLOW TREAD
TWIST RESISTANT

- Increased rigidity and stiffness in the ladder frame
- Reduces ladder twisting

TRI-BRACING
SUPER STABLE

- Strongest support between tread and stile
- Eliminates catch points

LIGHTWEIGHT DESIGN
SUPER LIGHT

- Industrial strength and safety with a lightweight advantage
- Reduces strain and fatigue

All these distinct advantages are engineered into our Professional range of Aluminium and Fibreglass ladders.

DISCOVER THE ADVANTAGE YOURSELF – INVEST IN OUR SUPERIOR PROFESSIONAL RANGE OF LADDERS THAT WILL GIVE YOU YEARS OF SERVICE.

BAILEY PRODUCT GUIDE 2021
CONTENTS

Choosing The Right Ladder

PAGE 4

Load/Duty Ratings & Ladder Safety

PAGE 6

Single Side Leaning & Double Sided Stepladders

PAGE 7

A general purpose stepladder accessed from a single side only or both sides, on a double sided stepladder.

Multi-Purpose Ladders

PAGE 11

Highly versatile – can be used as a stepladder and a straight ladder with adjustable heights, or separated into two low-level trestles.

SLS 3 IN 1 Ladders

PAGE 12

A revolutionary new design of ladder that can be used as Step Ladder, a Leaning Ladder or a Straight Ladder.

Dual Purpose & Step Extension Ladders

PAGE 13

Highly versatile (2 in 1) – converts from a stepladder to a straight ladder.

Extension & Single Ladders

PAGE 16

Designed for height access for builders, carpenters, plumbers and serious DIY. Fixed length or height adjustable.

Platform Stepladders

PAGE 20

Provides a safe work platform when working at heights'. Can be closed for storage.

Safety Steps

PAGE 25

A compact access solution where storage space is at a premium

Attic Ladders

PAGE 26

Lightweight, aluminium ladders designed to access roof spaces.

Order Pickers & Access Platforms

PAGE 27

Used for moderate/frequent use stock picking applications.

Modular Access/ Platform Systems

PAGE 29

A versatile platform system that can be configured to your requirements up to a platform height of 1.65m

Mobile Scaffolding

PAGE 30

Designed for quick, safe and efficient erection and use at the work site or around the home.

NEED SPARES FOR YOUR BAILEY LADDER? **VISIT LADDERSPARES.COM.AU**

CHOOSING THE RIGHT LADDER

STEP 1 – LADDER SIZE

Choose the correct size of ladder for the job

• 1m = 3 feet approximately

STEPLADDERS	
Ladder Size	Max. Reach Height
2	2.0m
3	2.3m
4	2.6m
5	2.9m
6	3.2m
7	3.5m
8	3.8m
10	4.4m
12	5.0m

EXTENSION LADDERS	
Ladder Size	Max. Reach Height
8	5.0m
10	6.2m
12	7.4m
14	8.9m
15	9.5m
16	10.1m
17	10.7m
18	11.6m
20	12.2m

PLATFORMS	
Platform Size	Max. Reach Height
2	2.6m
3	2.9m
4	3.2m
5	3.5m
6	3.75m
7	4.0m
8	4.3m
10	4.9m
12	5.5m

STEP 2 – LADDER TYPE

Choose the correct type of ladder for the job

Step Stool

Platform Stepladder

Single Sided Leaning Stepladder

Double Sided Leaning Stepladder

Dual Purpose Stepladder

Single & Extension Ladder

Order Picker & Access Platform

Scaffold

STEP 3 – LADDER MATERIAL

Choose the right construction

Aluminium: Lightweight

Fibreglass: Electro – Safe™ (non-conductive)

STEP 4 – LOAD/DUTY RATING

Choose a suitable load and duty rating

HOUSEHOLD/ DOMESTIC — DIY/ INDUSTRIAL — PROFESSIONAL/ INDUSTRIAL

Load Rating: The maximum load including the weight of the user, materials and tools which the ladder is intended to carry.

Duty Rating: The rating assigned to a ladder, ie. industrial or domestic, which indicates the service capability of the ladder.

Bailey product selection assistant: *http://baileyladders.com.au/product-selector*

LOAD/ DUTY RATINGS IN DETAIL AND LADDER SAFETY

What is a 'load rating'?

The maximum safe working load of the ladder, including the weight of the user tools/equipment and materials they are carrying.

Exceeding the safe working load is dangerous and voids warranties.
A minimum load rating of 120kg must be used in all 'workplaces'.

What is a 'duty rating'?

The duty rating is assigned by the manufacturer based on the product's design parameters.

There are two duty ratings: Domestic and Industrial. Only ladders with an 'Industrial' duty rating can be used in any workplace.

Ratings Explained

DOMESTIC 100KG

DOMESTIC

For domestic use in and around the home e.g. cleaning, cupboard access. Must not be used in a workplace. Made to the requirements of Australian Standards AS1892

INDUSTRIAL 135KG

INDUSTRIAL 120KG

INDUSTRIAL

For moderate industrial use.
An industrial grade of ladder for trade or serious DIY/handyman. Made to the requirements of Australian Standards AS1892

INDUSTRIAL 225KG W.L.L.

INDUSTRIAL 200KG

INDUSTRIAL 170KG

INDUSTRIAL 160KG

INDUSTRIAL 150KG

INDUSTRIAL 140KG

INDUSTRIAL – HEAVY DUTY – PROFESSIONAL

For heavy duty industrial trade/ commercial use by professional contractors, tradespersons, workplaces, serious DIY/handyman. Made to the requirements of Australian Standards AS1892

Ladder Safety and General Principles

- Ladders must be handled with care at all times.
- Observe the manufacturers warnings and instructions.
- Observe closely the area in which you wish to position the ladder and assess for risks (e.g. open door ways, overhead power lines, uneven ground).
- Where a risk is present, remove (or reduced to an acceptable level) the risk, or seek an alternative safe means of access.
- Ladders are designed and built for a specific use. Read the warning labels and never use the ladder that is not recommended by the manufacturer.
- Choose the right type of ladder and the correct height for the task at hand.
- Always inspect the ladder for damage prior to use.
- NEVER USE A LADDER THAT HAS BEEN DAMAGED OR HAS MISSING PARTS.
- Ensure the ladder is free from dirt, water and grease prior to use paying particular attention to the treads/ rungs.
- When using a ladder near a door way, block/lock the door and/or post a guard.
- Do not leave ladders unattended while they are erected in case of children climbing.
- Always wear fully enclosed footwear with slip resistance soles.
- Avoid using ladders in very wet or windy conditions.
- Never use a ladder if you are impaired by drugs, alcohol or sickness.

NEED SPARES FOR YOUR BAILEY LADDER? VISIT LADDERSPARES.COM.AU

SINGLE SIDED LEANING & DOUBLE SIDED STEPLADDERS

PROFESSIONAL PUNCHLOCK®
SINGLE SIDED LEANING STEPLADDER NEW

ALUMINIUM LIGHTWEIGHT | **INDUSTRIAL** | **150KG**

The new Bailey Pro Punchlock® aluminium single sided leaning stepladder gets you close to the worksurface improving job site safety and productivity.

- 150kg load rating and industrial duty rating make it suitable for trade and commercial applications
- The Punchlock® tread design increases torsional rigidity of the overall ladder frame
- Unique top cap allows the ladder to be safely used as a leaning ladder
- The multi-function top cap provides storage for tools
- Anti-slip PVC boots for added stability
- Light weight and strong aluminium construction
- Flat plate tri-bracing increases strength and stability
- Made to Australian Standards AS1892

Multi-function top cap

Product No.	Description	Nominal Size	Nominal Max. Reach Height	EAN Code	Nominal Weight
FS13957	Pro AL Single Sided Leaning 6 150kg	1.79m	3.19m	9312097064805	8.2kg
FS13959	Pro AL Single Sided Leaning 8 150kg	2.39m	3.79m	9312097064829	10.9kg

Spare Parts

SP15-020AZ Feet Kit

PROFESSIONAL PUNCHLOCK®
SINGLE SIDED LEANING STEPLADDER NEW

FIBREGLASS ELECTRO-SAFE™ | **INDUSTRIAL** | **150KG**

The new Bailey Pro Pro Punchlock® fibreglass single sided leaning stepladder gets you close to the worksurface improving job site safety and productivity

- 150kg load rating and industrial duty rating make it suitable for trade and commercial applications
- The Punchlock® tread design increases torsional rigidity of the overall ladder frame
- Electro-safe™ fibreglass design makes it suitable to use where an electrical hazard exists
- Unique top cap allows the ladder to be safely used as a leaning ladder
- Anti-slip PVC boots for added stability
- Flat plate tri-bracing increases strength and stability
- Made to Australian Standards AS1892

Multi-function top cap

Product No.	Description	Nominal Size	Nominal Max. Reach Height	EAN Code	Nominal Weight
FS13972	Pro FG Single Sided Leaning 6 150kg	1.79m	3.19m	9312097064959	10.5kg
FS13973	Pro FG Single Sided Leaning 7 150kg	2.09m	3.49m	9312097064966	12.0kg
FS13974	Pro FG Single Sided Leaning 8 150kg	2.39m	3.79m	9312097064973	13.8kg
FS13975	Pro FG Single Sided Leaning 10 150kg	2.99m	4.39m	9312097064980	17.1kg
FS13976	Pro FG Single Sided Leaning 12 150kg	3.59m	4.99m	9312097064997	20.9kg

Spare Parts

SP15-022AZ Feet Kit

TRADE RIVETED
DOUBLE SIDED STEPLADDER

ALUMINIUM LIGHTWEIGHT | **INDUSTRIAL** | **150KG**

- Riveted construction
- Industrial Duty Rated. Designed for use on industrial work sites where strength, durability and safety is required
- 150kg load rating
- Heavy duty extruded aluminium construction
- Internal arm system provides extra stability and resistance to ladder-walk
- Anti-slip feet for maximum grip on any surface for added safety and stability
- Made to Australian Standards AS1892

Product No.	Description	Nominal Size	Nominal Max. Reach Height	EAN Code	Nominal Weight
FS13428	TRADE AL DS 3 150kg	0.9m (3')	2.3m	9312097055629	5.9kg
FS13429	TRADE AL DS 4 150kg	1.2m (4')	2.6m	9312097055636	6.6kg
FS13430	TRADE AL DS 6 150kg	1.8m (6')	3.2m	9312097055643	9.6kg
FS13431	TRADE AL DS 8 150kg	2.4m (8')	3.8m	9312097055650	12.8kg

Spare Parts

SP15-026AZ S/P Feet Kit

PROFESSIONAL PUNCHLOCK® BIG TOP
DOUBLE SIDED STEPLADDER NEW

ALUMINIUM LIGHTWEIGHT | **INDUSTRIAL** | **150KG**

The new Bailey Pro Punchlock® Big Top double sided stepladder has an extra wide top cap and base for improved stability and safety

- 150kg load rating and industrial duty rating make it suitable for trade and commercial applications
- The Punchlock® tread design increases torsional rigidity of the overall ladder frame
- The extra wide multi-function top cap provides storage for tools, improving work site safety and productivity
- Anti-slip PVC boots for added stability
- Double sided design for greater versatility and load bearing strength
- Light weight and strong aluminium construction
- Flat plate tri-bracing increases strength and stability
- Made to Australian Standards AS1892

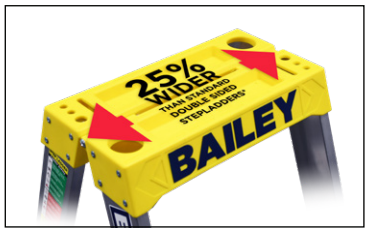

Multi-function top cap

Product No.	Description	Nominal Size	Nominal Max. Reach Height	EAN Code	Nominal Weight
FS13966	Pro AL Double Sided Big Top 3 150kg	0.89m	2.29m	9312097064898	6.1kg
FS13967	Pro AL Double Sided Big Top 4 150kg	1.19m	2.59m	9312097064904	7.5kg

Spare Parts

SP15-021AZ Feet Kit

NEED SPARES FOR YOUR BAILEY LADDER? **VISIT LADDERSPARES.COM.AU**

PROFESSIONAL PUNCHLOCK®
DOUBLE SIDED STEPLADDER NEW

ALUMINIUM LIGHTWEIGHT | **INDUSTRIAL** | **150KG**

The new Bailey Pro Punchlock® aluminium double sided stepladder multi-function top cap has a paint tin and tool holder for improved work site safety and productivity.

- 150kg load rating and industrial duty rating make it suitable for trade and commercial applications
- The Punchlock tread design increases torsional rigidity of the overall ladder frame
- The multi-function top cap provides storage for paint cans and tools improving work site safety and productivity
- Anti-slip PVC boots for added stability
- Double sided design for greater versatility and load bearing strength
- Light weight and strong aluminium construction
- Flat plate tri-bracing increases strength and stability
- Made to Australian Standards AS1892

Multi-function top cap

Product No.	Description	Nominal Size	Nominal Max. Reach Height	EAN Code	Nominal Weight
FS13960	Pro AL Double Sided 3 150kg	0.89m	2.29m	9312097064836	5.6kg
FS13961	Pro AL Double Sided 4 150kg	1.19m	2.59m	9312097064843	6.9kg
FS13963	Pro AL Double Sided 6 150kg	1.79m	3.19m	9312097064867	9.8kg
FS13965	Pro AL Double Sided 8 150kg	2.39m	3.79m	9312097064881	13.7kg

Spare Parts

SP15-021AZ	Feet Kit

PROFESSIONAL PUNCHLOCK®
DOUBLE SIDED STEPLADDER NEW

FIBREGLASS ELECTRO-SAFE™ | **INDUSTRIAL** | **150KG**

The new Bailey Pro Punchlock® fibreglass double sided stepladder multi-function top cap has a tool holder for improved work site safety and productivity.

- 150kg load rating and industrial duty rating make it suitable for trade and commercial applications
- The Punchlock tread design increases torsional rigidity of the overall ladder frame
- Electro-safe™ fibreglass design makes it suitable to use where an electrical hazard exists
- The multi-function top cap provides storage for tools, improving work site safety and productivity
- Anti-slip PVC boots for added stability
- Double sided design for greater versatility and load bearing strength
- Flat plate tri-bracing increases strength and stability
- Made to Australian Standards AS1892

Multi-function top cap

Product No.	Description	Nominal Size	Nominal Max. Reach Height	EAN Code	Nominal Weight
FS13977	Pro FG Double Sided 3 150kg	0.89m	2.29m	9312097065000	7.4kg
FS13978	Pro FG Double Sided 4 150kg	1.19m	2.59m	9312097065017	9.1kg
FS13980	Pro FG Double Sided 6 150kg	1.79m	3.19m	9312097065031	12.8kg
FS13981	Pro FG Double Sided 7 150kg	2.09m	3.49m	9312097065048	15.6kg
FS13982	Pro FG Double Sided 8 150kg	2.39m	3.79m	9312097065055	17.6g
FS13983	Pro FG Double Sided 10 150kg	2.99m	4.39m	9312097065062	22.2g
FS13984	Pro FG Double Sided 12 150kg	3.59m	4.99m	9312097065079	27.1kg

Spare Parts

SP15-023AZ	Feet Kit

NEED SPARES FOR YOUR BAILEY LADDER? **VISIT LADDERSPARES.COM.AU**

MULTI-PURPOSE LADDERS

BXS 20
MULTI-PURPOSE LADDERS

ALUMINIUM LIGHTWEIGHT | **INDUSTRIAL** | **135KG**

- Industrial Duty Rated. Designed for use on industrial work sites
- 135kg load rating
- Strong, aluminium construction
- The most versatile ladder you can own
- Telescopic design quickly adjusts to a comfortable working height
- Adjust height quickly with spring loaded 'J' locks
- Adjust angle positions easily with push knobs
- Wide flared bottom for firm support and stability
- Anti-slip feet for added safety and stability
- Made to Australian Standards AS1892

Product No.	Description	Nominal Size	Nominal Max. Reach Height	EAN Code	Nominal Weight
FS13644	BXS20 MKII Multi-Purpose 135kg	2.3/4.5m (7'6"/14'8")	3.1/5.5m	9312097060005	16.7kg
Spare Parts					
SP15-011	S/P Feet Kit				

Stairway ladder

Stepladder

Straight ladder

Trestle ladder

NEED SPARES FOR YOUR BAILEY LADDER? VISIT LADDERSPARES.COM.AU

SLS 3 IN 1 LADDERS

SLS 3 IN 1 LADDERS
STEP/ LEANING/ STRAIGHT LADDERS NEW

Clever leaning top cap
- Inside corner leaning
- Outside corner leaning
- Stud frame leaning

Patented barrel hinge
- Fast single handed operation
- Auto position lock function

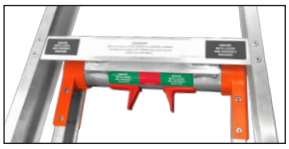

Patented Barrel Hinge

ALUMINIUM LIGHTWEIGHT **INDUSTRIAL** **150KG**

Product No.	Description	Max. Reach Step	Max. Reach Leaning	Max. Reach Straight	EAN Code	Nominal Weight
FS13862	AL-SLS 3 IN 1 LADDER 150kg 6 (1.8m)	3.10m	3.10m	4.00m	9312097062979	8.5kg
FS13863	AL-SLS 3 IN 1 LADDER 150kg 7 (2.1m)	3.40m	3.40m	4.50m	9312097062986	9.8kg
FS13864	AL-SLS 3 IN 1 LADDER 150kg 8 (2.4m)	3.70m	3.70m	5.10m	9312097062993	11.1kg

FIBREGLASS ELECTRO-SAFE™ **INDUSTRIAL** **150KG**

Product No.	Description	Max. Reach Step	Max. Reach Leaning	Max. Reach Straight	EAN Code	Nominal Weight
FS13884	FG-SLS 3 IN 1 LADDER 150kg 6 (1.8m)	3.14m	3.14m	3.99m	9312097063228	11.5kg
FS13885	FG-SLS 3 IN 1 LADDER 150kg 7 (2.1m)	3.42m	3.42m	4.56m	9312097063235	13.3kg
FS13886	FG-SLS 3 IN 1 LADDER 150kg 8 (2.4m)	3.71m	3.71m	5.13m	9312097063242	15.2kg

SLS BAILEY LADDERS
THE SLS—STEP/ LEANING/ STRAIGHT

NEED SPARES FOR YOUR BAILEY LADDER? VISIT LADDERSPARES.COM.AU

DUAL PURPOSE & STEP EXTENSION LADDERS

PROFESSIONAL PUNCHLOCK®
DUAL PURPOSE STEPLADDER NEW

ALUMINIUM LIGHTWEIGHT | **INDUSTRIAL** | **150KG**

- Industrial Duty Rated and designed for use on industrial work sites where strength, durability and safety is required.
- 150kg load rating.
- PUNCHLOCK® rung to stile joint increases torsional rigidity of the overall ladder frames.
- Single handed latch operation easily converts from a stepladder to a straight ladder.
- Multi-function top cap with storage for tools and parts.
- Rear frame designed to allow use as a double sided stepladder.
- PVC boots and wall pads provide additional stability.
- Factory fitted "V" rung for use on poles and trees.
- Made to Australian Standards AS1892.

Product No.	Description	Nominal Size	Nominal Max. Reach Height	EAN Code	Nominal Weight
FS13988	Pro Aluminium DP6 150kg PUNCHLOCK®	1.79/3.30m	3.19/4.30m	9312097065116	8.4kg
FS13989	Pro Aluminium DP7 150kg PUNCHLOCK®	2.09/3.90m	3.49/4.90m	9312097065123	9.7kg
FS13990	Pro Aluminium DP8 150kg PUNCHLOCK®	2.39/4.50m	3.79/5.50m	9312097065130	11.0kg

Spare Parts

SP15-026AZ S/P Feet Kit

TRADE RIVETED
DUAL PURPOSE STEPLADDER

ALUMINIUM LIGHTWEIGHT | **INDUSTRIAL** | **150KG**

- Riveted construction
- Industrial Duty Rated. Designed for use on industrial work sites where strength, durability and safety is required
- 150kg load rating
- Heavy duty extruded aluminium construction
- Three (3) sizes — 6, 7, 8 — a size for every height
- Ideal for trade and serious DIY
- Made to Australian Standards AS1892

Product No.	Description	Nominal Size	Nominal Max. Reach Height	EAN Code	Nominal Weight
FS13432	TRADE AL DP6 150kg	1.8/3.2m (6'/10')	3.2/4.2m	9312097055667	7.2kg
FS13433	TRADE AL DP7 150kg	2.1/3.8m (7'/12')	3.5/4.8m	9312097055674	8.4kg
FS13434	TRADE AL DP8 150kg	2.4/4.4m (8'/14')	3.8/5.4m	9312097055681	9.6kg

Spare Parts

SP15-026AZ S/P Feet Kit

NEED SPARES FOR YOUR BAILEY LADDER? **VISIT LADDERSPARES.COM.AU**

PROFESSIONAL RIVETED
DUAL PURPOSE STEPLADDER WITH TREE & POLE SUPPORT

FIBREGLASS ELECTRO-SAFE™ **INDUSTRIAL** **150KG**

- Tree/pole support added to rear section dramatically improves stability when used against trees and poles
- Three (3) sizes — 6, 7, 8 — a size for every height
- Large anti-slip "Boots" increases stability when working at heights
- Trapezoidal tread design and deep fascia top caps increase the torsional rigidity of the overall ladder frames
- Industrial Duty Rated. Designed for use on Industrial work sites
- 150kg Load Rate
- Electro-Safe™ (non-conductive)
- Easily converts from a stepladder to a single ladder
- Made to Australian Standards AS1892

TREE & POLE SUPPORT • NEW • ADDED SAFETY & STABILITY

Product No.	Description	Nominal Size	Nominal Max. Reach Height	EAN Code	Nominal Weight
FS13668	FG DP6 with Tree/Pole Support	1.8/3.2m (6'/10')	3.2/4.2m	9312097060715	10.5kg
FS13669	FG DP7 with Tree/Pole Support	2.1/3.8m (7'/12')	3.5/4.8m	9312097060722	15.1kg
FS13670	FG DP8 with Tree/Pole Support	2.4/4.4m (8'/14')	3.8/5.4m	9312097060739	16.8kg

Spare Parts

SP15-009AZ	S/P Feet Kit

PROFESSIONAL PUNCHLOCK®
STEP EXTENSION STEPLADDER NEW

FIBREGLASS ELECTRO-SAFE™ **INDUSTRIAL** **150KG**

- Industrial Duty Rated and designed for use on industrial work sites where strength, durability and safety is required.
- 150kg load rating.
- Electro-Safe™ ladders offer non-conductive properties suitable where electrical hazards exist.
- PUNCHLOCK® rung to stile joint increases torsional rigidity of the overall ladder frames.
- Innovative top cap design allow the ladder to be used as a leaning ladder as well as providing storage for tools and equipment.
- The back legs can be adjusted to allow the ladder to move up in 300 mm increments when in the extension ladder mode.
- The back section is designed to fit into small openings like man-hole covers.
- Anti-slip PVC boots for added stability.
- Factory fitted "V" rung for use on poles and trees.
- Made to Australian Standards AS1892.

SUPER STRONG PUNCHLOCK • TREAD TO STILE JOINT

Product No.	Description	Nominal Size	Nominal Max. Reach Height	EAN Code	Nominal Weight
FS13985	Pro Fibreglass FSE6 PUNCHLOCK® 150kg	1.79/3.13m	3.19/4.13m	9312097065086	14.0kg
FS13986	Pro Fibreglass FSE7 PUNCHLOCK® 150kg	2.09/3.73m	3.49/4.73m	9312097065093	15.8kg
FS13987	Pro Fibreglass FSE8 PUNCHLOCK® 150kg	2.39/4.03m	3.79/5.03m	9312097065109	17.5kg

Spare Parts

SP15-019AZ	S/P Feet Kit

NEED SPARES FOR YOUR BAILEY LADDER? **VISIT LADDERSPARES.COM.AU**

EXTENSION & SINGLE LADDERS

TRIPLE EXT 6/14
EXTENSION LADDER NEW

ALUMINIUM LIGHTWEIGHT | **INDUSTRIAL** | **150KG**

- 150kg load rating and industrial duty
- The triple section compact design provides safe access to heights up to 5.39m but is under 2m when closed.
- The compact design makes it easier to store transport and manoeuvre indoors.
- Durable punchlock D rung construction providing superior climbing comfort.
- Convenient carry handles attached for easy, single-handed carrying
- Fits in most cars when in the closed position
- Slip resistant PVC boots also increases protection of the stile ends
- More overlapping rung positions for improved foot comfort
- Made to Australian Standards AS1892

Product No.	Description	Nominal Size	Nominal Max. Reach Height	EAN Code	Nominal Weight
FS13908	Bailey Triple Ext 6/14 150kg Ind	1.95/4.39m	5.39m	9312097063983	13.5kg
Spare Parts					
SP15-015AZ	Feet Kit				
SP45-063AZ	End Caps				

PROFESSIONAL PUNCHLOCK® WITH LEVELLER
EXTENSION LADDER NEW

ALUMINIUM LIGHTWEIGHT | **INDUSTRIAL** | **150KG**

- Factory fitted ladder levelling system allows for safe use on uneven surfaces
- 150kg load rating and industrial duty rating make it suitable for commercial applications
- Durable punchlock D rung construction providing superior climbing comfort
- Interlocking stiles provide increased resistance to side sway and bounce providing a more secure climbing experience
- Rung wear pads provide protection and easier raising and lowering of the ladder
- 8mm kermantle rope with a side rope and pulley system that keeps the rope away from the users feet for increased safety
- PVC boots provide superior slip resistance
- Large rung braces for increased strength
- Made to Australian Standards AS1892

Product No.	Description	Nominal Size	Nominal Max. Reach Height	EAN Code	Nominal Weight
FS13905	Pro AL Ext 10 Leveller 150kg Ind	3.18/5.01m	6.01m	9312097063952	15.4kg
FS13906	Pro AL Ext 12 Leveller 150kg Ind	3.79/6.23m	7.23m	9312097063969	19.7kg
Spare Parts					
SP15-016AZ	Feet Kit				
SP45-063AZ	End Caps				
SP25-004AZ	Rope Kit				

NEED SPARES FOR YOUR BAILEY LADDER? **VISIT LADDERSPARES.COM.AU**

PROFESSIONAL PUNCHLOCK®
EXTENSION LADDER NEW

ALUMINIUM LIGHTWEIGHT | **INDUSTRIAL** | **150KG**

- 150kg load rating and industrial duty rating make it suitable for commercial applications
- Durable punchlock D rung construction providing superior climbing comfort
- Interlocking stiles provide increased resistance to side sway and bounce providing a more secure climbing experience
- Rung wear pads provide protection and easier raising and lowering of the ladder
- 8mm kermantle rope with a side rope and pulley system that keeps the rope away from the users feet for increased safety
- PVC boots provide superior slip resistance
- Large rung braces for increased strength
- Made to Australian Standards AS1892
- Note: FS13897 does not feature rope and pulley

Product No.	Description	Nominal Size	Nominal Max. Reach Height	EAN Code	Nominal Weight
FS13897	Pro AL Ext 8 150kg Ind	2.57/4.09m	5.09m	9312097063877	11.5kg
FS13898	Pro AL Ext 10 150kg Ind	3.18/5.31m	6.31m	9312097063884	14.3kg
FS13899	Pro AL Ext 12 150kg Ind	3.79/6.53m	7.53m	9312097063891	18.7kg
FS13900	Pro AL Ext 14 150kg Ind	4.40/7.75m	8.75m	9312097063907	21.5kg
FS13901	Pro AL Ext 16 150kg Ind	5.04/9.00m	10.00m	9312097063914	34.5kg
FS13902	Pro AL Ext 18 150kg Ind	5.65/10.22m	11.22m	9312097063921	38.5kg
FS13903	Pro AL Ext 20 150kg Ind	6.26/11.14m	12.14m	9312097063938	42.4kg

Spare Parts

SP15-015AZ	Feet Kit (for sizes: 8, 10, 12, 14)
SP15-017AZ	Feet Kit (for sizes: 16, 18, 20)
SP45-063AZ	End Caps (for sizes: 8, 10, 12, 14)
SP45-064AZ	End Caps (for sizes: 16, 18, 20)
SP25-004AZ	S/P Rope Kit

PROFESSIONAL PUNCHLOCK® FXN WITH VEE RUNG
EXTENSION LADDER NEW

FIBREGLASS ELECTRO-SAFE™ | **INDUSTRIAL** | **160/170KG**

- 170kg load rate on sizes 8 through to 16 and 160kg on size 18
- The Punchlock top hat construction increases resistance to bounce and side sway
- Electro – Safe™ (non-conductive) fibreglass construction is a must where electrical hazards exist
- Anti-slip PVC boots for added stability
- Adjustable pulley system allows the user to configure the rope as a side or centre pull
- Factory fitted PVC coated pole strap allows the ladder to be positioned against poles and trees
- Made to Australian Standards AS1892

Product No.	Description	Nominal Size	Nominal Max. Reach Height	EAN Code	Nominal Weight
FS13909	Pro FG FXN Ext 8 170kg Ind	2.60/4.13m	5.13m	9312097063990	21.1kg
FS13910	Pro FG FXN Ext 10 170kg Ind	3.21/5.35m	6.35m	9312097064003	25.6kg
FS13911	Pro FG FXN Ext 12 170kg Ind	3.82/6.57m	7.57m	9312097064010	30.0kg
FS13912	Pro FG FXN Ext 14 170kg Ind	4.43/7.79m	8.79m	9312097064027	34.4kg
FS13913	Pro FG FXN Ext 16 170kg Ind	5.04/9.01m	10.01m	9312097064034	38.9kg
FS13914	Pro FG FXN Ext 18 160kg Ind	5.65/9.92m	10.92m	9312097064041	43.3kg

Spare Parts

SP15-017AZ	Feet Kit
SP45-064AZ	End Caps
SP25-005AZ	Rope Kit

NEED SPARES FOR YOUR BAILEY LADDER? VISIT LADDERSPARES.COM.AU

PROFESSIONAL PUNCHLOCK® FSXN WITH VEE RUNG
EXTENSION LADDER NEW

FIBREGLASS ELECTRO-SAFE™ | **INDUSTRIAL** | **140/150KG**

- 150kg load rating on sizes 8 to 14 and 140kg on size 16
- The Punchlock® construction provides a durable rung to stile connection
- Interlocking stiles provide increased resistance to side sway providing a more secure climbing experience
- Anti-slip PVC boots for added stability
- Rung wear pads provide protection and easier raising and lowering of the ladder
- Factory fitted V rung allows the ladder to be safely positioned against poles and trees
- Made to Australian Standards AS1892

Product No.	Description	Nominal Size	Nominal Max. Reach Height	EAN Code	Nominal Weight
FS13917	Pro FG FSXN Ext 8 Vee 150kg Ind	2.63/4.16m	5.16m	9312097064058	19.3kg
FS13918	Pro FG FSXN Ext 10 Vee 150kg Ind	3.24/5.38m	6.38m	9312097064065	23.2kg
FS13919	Pro FG FSXN Ext 12 Vee 150kg Ind	3.85/6.60m	7.60m	9312097064072	27.1kg
FS13920	Pro FG FSXN Ext 14 Vee 150kg Ind	4.46/7.82m	8.82m	9312097064089	31.2kg
FS13921	Pro FG FSXN Ext 16 Vee 140kg Ind	5.07/9.04m	10.04m	9312097064096	35.1kg

Spare Parts

SP15-017AZ	Feet Kit
SP45-064AZ	End Caps
SP25-004AZ	Rope Kit

PROFESSIONAL PUNCHLOCK®
SINGLE LADDER NEW

ALUMINIUM LIGHTWEIGHT | **INDUSTRIAL** | **150KG**

- 150kg load rating and industrial duty rating make it suitable for commercial applications
- Durable punchlock D rung construction providing superior climbing comfort
- PVC boots at the top and bottom of the ladder provide superior slip resistance
- Large rung braces for increased strength
- Extra heavy duty aluminium construction
- Made to Australian Standards AS1892

Product No.	Description	Nominal Size	Nominal Max. Reach Height	EAN Code	Nominal Weight
FS13890	Pro AL Single 7 150kg Ind	2.40m	3.40m	9312097063808	11.5kg
FS13891	Pro AL Single 9 150kg Ind	3.01m	4.01m	9312097063815	14.3kg
FS13892	Pro AL Single 11 150kg Ind	3.62m	4.62m	9312097063822	18.7kg
FS13893	Pro AL Single 13 150kg Ind	4.23m	5.23m	9312097063839	21.5kg

Spare Parts

SP15-015AZ	Feet Kit
SP45-063AZ	End Caps

NEED SPARES FOR YOUR BAILEY LADDER? **VISIT LADDERSPARES.COM.AU**

PLATFORM STEPLADDERS

PROFESSIONAL PUNCHLOCK®
PLATFORM STEPLADDER NEW

ALUMINIUM LIGHTWEIGHT | **INDUSTRIAL** | **170KG**

The new Bailey Pro Punchlock® aluminium platform stepladder has a large and stable work platform to improve work site safety and efficiency

- 170kg load rating and industrial duty rating make it suitable for trade and commercial applications
- The Punchlock tread design increases torsional rigidity of the overall ladder frame
- Large 400 X 500mm platform for added safety and all day standing comfort
- 900mm handrail height from platform
- Anti-slip PVC boots for added stability
- Multi-function handrail for tool storage
- Safety gates and castors available as accessories
- Made to Australian Standards AS1892

Product No.	Description	Nominal Platform Height	Nominal Max. Reach Height	EAN Code	Nominal Weight
FS13931	Pro AL Platform Ladder 2	0.57m	2.57m	9312097064133	8.8kg
FS13932	Pro AL Platform Ladder 3	0.85m	2.86m	9312097064140	10.0kg
FS13933	Pro AL Platform Ladder 4	1.13m	3.14m	9312097064157	11.1kg
FS13934	Pro AL Platform Ladder 5	1.42m	3.43m	9312097064164	12.3kg
FS13935	Pro AL Platform Ladder 6	1.70m	3.71m	9312097064171	14.0kg
FS13936	Pro AL Platform Ladder 7	1.99m	4.00m	9312097064188	19.5kg
FS13937	Pro AL Platform Ladder 8	2.27m	4.28m	9312097064195	21.0kg
Accessories					
FS13991	Castor / Wheel Kit (White Spring)	Fits 2-5 step	-	9312097021419	2.5kg
FS13992	Castor / Wheel Kit (Yellow Spring)	Fits 6-7 step	-	9312097021426	2.5kg
FS13993	Castor / Wheel Kit (Green Spring)	Fits 8 step		9312097065161	3.3kg
FS13952	Safety Gate Kit (Pro AL, Pro FG, P150 AL, P150 FG)			9312097060036	2.7kg

Note: Platform height is approximate vertical height to platform from the ground

SAFETY GATE FS13952 **NOW AVAILABLE**

Spare Parts

SP15-018AZ S/P Boot Kit AL & Ext. IND PFS

P170 JOB STATION
PLATFORM STEPLADDER

ALUMINIUM LIGHTWEIGHT | **INDUSTRIAL** | **170KG**

- Huge platform area (610 x 457mm) adds comfort and stability
- New 'trapezoidal tread design' provides an incredibly strong tread to stile joint
- Fully reinforced polypropylene platform with metal inserts for maximum strength
- Checker plate 'deck pattern' provides an anti-slip standing area
- Extra strong, heavy duty aluminium construction for superior durability
- Large anti-slip feet for maximum stability and durability
- Convenient carry handle allows for easy transport
- Swivel castors for improved mobility
- Fully integrated bracing and castor system - patented industry leading design
- Made to Australian Standards AS1892

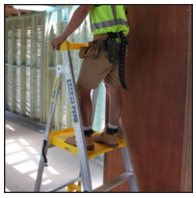

Castors Included

Product No.	Description	Nominal Platform Height	Nominal Max. Reach Height	EAN Code	Nominal Weight
FS13538	AL P170 3 Job Station	0.9m	2.87m	9312097058620	16.9kg
FS13539	AL P170 4 Job Station	1.2m	3.16m	9312097058637	18.4kg
FS13540	AL P170 5 Job Station	1.5m	3.45m	9312097058644	19.9kg
FS13541	AL P170 6 Job Station	1.8m	3.74m	9312097058651	21.9kg
FS13542	AL P170 7 Job Station	2.03m	4.03m	9312097058668	27.4kg
FS13543	AL P170 8 Job Station	2.32m	4.32m	9312097058675	28.4kg
FS13544	AL P170 10 Job Station	2.91m	4.91m	9312097058682	33.2kg
FS13545	AL P170 12 Job Station	3.49m	5.49m	9312097058699	37.6kg
Accessories					
FS13954	Safety Gate Kit (P170 AL & P170 FG)			9312097064362	2.4kg

P170 SAFETY GATE FS13648 **NOW AVAILABLE**

Spare Parts

SP15-005AZ S/P Feet Kit

SP30-001AZ S/P Castor Kit

SCAN TO VIEW SAFETY GATE DEMO VIDEO

NEED SPARES FOR YOUR BAILEY LADDER? **VISIT LADDERSPARES.COM.AU**

P150
PLATFORM STEPLADDER

ALUMINIUM LIGHTWEIGHT | **INDUSTRIAL** | **150KG**

- Lightweight and highly portable – Up to 25% lighter than competitive products
- Fully functional 'magnetised' section on handrail secures tools and fasteners
- Large standing area (508 x 416mm) adds comfort and stability
- 150kg load rating
- Industrial Duty Rating
- Checker plate 'deck pattern' provides an anti-slip standing area
- Extra strong, heavy duty aluminium construction for superior durability
- Large anti-slip feet for maximum stability and durability
- tSwivel castors for improved mobility and improved productivity (available as an accessory)
- Made to Australian Standards AS1892

P150 SAFETY GATE FS13647
NOW AVAILABLE

Spare Parts

SP15-004AZ S/P Feet Kit

Product No.	Description	Nominal Platform Height	Nominal Max. Reach Height	EAN Code	Nominal Weight
FS13580	AL P150 3 150kg	0.9m	2.9m	9312097059191	11kg
FS13581	AL P150 4 150kg	1.2m	3.2m	9312097059207	12.5kg
FS13582	AL P150 5 150kg	1.5m	3.5m	9312097059214	13.9kg
FS13583	AL P150 6 150kg	1.8m	3.8m	9312097059221	15.8kg
Accessories					
FS13584	Castor Kit	-	-	9312097059238	3.5kg
FS13952	Safety Gate Kit (Pro AL, Pro FG, P150 AL, P150 FG)			9312097064348	2.6kg

RETAIL/ OFFICE
PLATFORM STEPLADDER

ALUMINIUM LIGHTWEIGHT | **INDUSTRIAL** | **120KG**

- Large 300mm deep and 250mm wide platform provides a comfortable work position
- Multi-function flip top handrail
- Ani-slip PVC boots for added stability
- Trapezoidal tread profile for strength and durability
- 115mm deep when closed makes it easy to store when not in use
- Available in three sizes with platform heights ranging from 570mm to 1130mm providing a reach height from 2.6m to 3.1m
- 120kg load rating and industrial duty rating

RPFS top cap

RPFS BAILEY LADDERS
THE RPFS - RETAIL PLATFORM STEPLADDER

Product No.	Description	Nominal Platform Height	Nominal Max. Reach Height	EAN Code	Nominal Weight
FS13868	Retail Platform Stepladder 2	0.57m	2.6m	9312097063068	4.5kg
FS13869	Retail Platform Stepladder 3	0.85m	2.9m	9312097063075	5.6kg
FS13870	Retail Platform Stepladder 4	1.13m	3.1m	9312097063082	6.9kg

NEED SPARES FOR YOUR BAILEY LADDER? VISIT LADDERSPARES.COM.AU

PROFESSIONAL PUNCHLOCK®
PLATFORM STEPLADDER NEW

FIBREGLASS ELECTRO-SAFE™ **INDUSTRIAL** **170KG**

The new Bailey Pro Punchlock® fibreglass platform stepladder has a large and stable work platform to improve work site safety and efficiency

- 170kg load rating and industrial duty rating make it suitable for trade and commercial applications
- The Punchlock tread design increases torsional rigidity of the overall ladder frame
- Large 400 X 500mm platform for added safety and all day standing comfort
- 900mm handrail height from platform
- Electro-safe™ fibreglass design makes it suitable to use where an electrical hazard exists
- Anti-slip PVC boots for added stability
- Multi-function handrail for tool storage
- Safety gates and castors available as accessories
- Made to Australian Standards AS1892

Product No.	Description	Nominal Platform Height	Nominal Max. Reach Height	EAN Code	Nominal Weight
FS13945	Pro FG Platform Ladder 2	0.57m	2.57m	9312097064270	11.4kg
FS13946	Pro FG Platform Ladder 3	0.86m	2.86m	9312097064287	13.1kg
FS13947	Pro FG Platform Ladder 4	1.14m	3.14m	9312097064294	14.8kg
FS13948	Pro FG Platform Ladder 5	1.43m	3.43m	9312097064300	16.5kg
FS13949	Pro FG Platform Ladder 6	1.71m	3.71m	9312097064317	18.7kg
FS13950	Pro FG Platform Ladder 7	2.00m	4.00m	9312097064324	24.8kg
FS13951	Pro FG Platform Ladder 8	2.28m	4.28m	9312097064331	26.8kg
Accessories				**EAN Code**	
FS13991	Castor / Wheel Kit (White Spring)	Fits 2-3 step	-	9312097021419	2.5kg
FS13992	Castor / Wheel Kit (Yellow Spring)	Fits 4-6 step	-	9312097021426	2.5kg
FS13993	Castor / Wheel Kit (Green Spring)	Fits 7-8 step	-	9312097065161	3.3kg
FS13952	Safety Gate Kit (Pro AL, Pro FG, P150 AL, P150 FG)			9312097060036	2.7kg

Note: Platform height is approximate vertical height to platform from the ground

SAFETY GATE FS13952 **NOW AVAILABLE**

Spare Parts/Accessories

SP15-019AZ S/P Boot Kit FG PGS & FSE

P170 JOB STATION
PLATFORM STEPLADDER

FIBREGLASS ELECTRO-SAFE™ **INDUSTRIAL** **170KG**

- Huge platform area (610 x 457mm) adds comfort and stability
- New 'trapezoidal tread design' provides an incredibly strong tread to stile joint
- Multi-function handrail with optional 'DropLok' accessories converts a handrail into a Job Station (15kg capacity)
- Fully reinforced polypropylene platform with metal inserts for maximum strength
- Electro – Safe™ (non-conductive)
- Checker plate 'deck pattern' provides an anti-slip standing area
- Extra strong, heavy duty fibreglass construction for superior durability
- Large anti-slip feet for maximum stability and durability
- Convenient carry handle allows for easy transport for improved mobility and improved productivity
- Fully integrated bracing and castor system - patented industry leading design
- Made to Australian Standards AS1892

Carry Handle

Product No.	Description	Nominal Platform Height	Nominal Max. Reach Height	EAN Code	Nominal Weight
FS13530	FG P170 3 Job Station	0.9m	2.9m	9312097058545	17.9kg
FS13531	FG P170 4 Job Station	1.2m	3.2m	9312097058552	19.5kg
FS13532	FG P170 5 Job Station	1.5m	3.5m	9312097058569	21.2kg
FS13533	FG P170 6 Job Station	1.8m	3.8m	9312097058576	23.4kg
FS13534	FG P170 7 Job Station	2.03m	4.03m	9312097058583	29kg
FS13535	FG P170 8 Job Station	2.32m	4.32m	9312097058590	30.3kg
FS13536	FG P170 10 Job Station	2.91m	4.91m	9312097058606	35.3kg
FS13537	FG P170 12 Job Station	3.49m	5.49m	9312097058613	40.1kg
Accessories					
FS13954	Safety Gate Kit (P170 AL & P170 FG)			9312097064362	2.4kg

SCAN TO VIEW P170 VIDEO

Spare Parts

SP15-005AZ S/P Feet Kit

SP30-001AZ S/P Castor Kit

NEED SPARES FOR YOUR BAILEY LADDER? **VISIT LADDERSPARES.COM.AU**

P150
PLATFORM STEPLADDER

FIBREGLASS ELECTRO-SAFE™ **INDUSTRIAL** **150KG**

- Lightweight and highly portable – Up to 25% lighter than competitive products
- Fully functional 'magnetised' handrail secures tools and fasteners
- Electro – Safe™ (non-conductive)
- Large standing area (508 x 416mm) adds comfort and stability
- 150kg load rating
- Checker plate 'deck pattern' provides an anti-slip standing area
- Heavy duty fibreglass construction for superior durability
- Large anti-slip feet for maximum stability and durability
- Swivel castors for improved mobility and improved productivity (available as an accessory)
- Made to Australian Standards AS1892

LIGHTWEIGHT - UP TO 25% LIGHTER THAN OTHERS

Spare Parts

SP15-009AZ S/P Feet Kit

Product No.	Description	Nominal Platform Height	Nominal Max. Reach Height	EAN Code	Nominal Weight
FS13576	HD FG P150 3 150kg	0.9m	2.9m	9312097059153	12.1kg
FS13577	HD FG P150 4 150kg	1.2m	3.2m	9312097059160	13.8kg
FS13578	HD FG P150 5 150kg	1.5m	3.5m	9312097059177	15.4kg
FS13579	HD FG P150 6 150kg	1.8m	3.8m	9312097059184	17.5kg
Accessories					
FS13584	Castor Kit	-	-	9312097059238	3.5kg
FS13952	Safety Gate Kit (Pro AL, Pro FG, P150 AL, P150 FG)			9312097064348	2.7kg

SAFETY GATE
FOR PLATFORM STEPLADDERS

- Fully surrounds the user
- Improves safety on platform stepladders
- Maintains a safe working zone
- Folds down for easy access
- Folds away with ladder
- Quick and easy to fit
- Simple to use
- Ladder still fits on roof racks
- Safety gates will fit previous models of platform stepladders

Product No.	Description	EAN Code	Nominal Weight
FS13952	Safety Gate Kit (Pro AL, Pro FG, P150 AL, P150 FG)	9312097064348	2.7kg
FS13953	Safety Gate Kit (Ext Industry & Ladderweld)	9312097064355	2.6kg
FS13954	Safety Gate Kit (P170 AL & P170 FG)	9312097064362	2.4kg

ACCESSORIES
FOR PLATFORM STEPLADDERS

Product No.	Description	EAN Code	Nominal Weight
FS13991	Castor / Wheel Kit (White Spring) — Fits 2-3 step	9312097065147	3.3kg
FS13992	Castor / Wheel Kit (Yellow Spring) — Fits 4-6 step	9312097065154	3.3kg
FS13993	Castor / Wheel Kit (Green Spring) — Fits 7-8 step	9312097065161	3.3kg
FS13952	Safety Gate Kit	9312097064348	2.6kg

NEED SPARES FOR YOUR BAILEY LADDER? VISIT LADDERSPARES.COM.AU

SAFETY STEPS

SAFETY STEPS

ALUMINIUM LIGHTWEIGHT | **INDUSTRIAL** | **150KG**

Bailey's NEW Safety Step provides stair like access and is ultra compact when folded and not in use

- Light weight aluminium construction
- Slim profile for easy storage when not in use
- Wide and deep treads with anti-slip rubber insert for safety and stability
- Racked front frame for stair-like access
- Strong 150kg load rating
- Folding handrail comes as standard
- Made to the Australian Standard AS1892

Product No.	Description	Size	Maximum Reach Height	EAN Code	Weight
FS13750	Stairway Ladder 2 Step with Safety Rail 150kg Ind	0.45m	2.45m	9312097061842	6.6kg
FS13751	Stairway Ladder 3 Step with Safety Rail 150kg Ind	0.67m	2.67m	9312097061859	8.6kg
FS13752	Stairway Ladder 4 Step with Safety Rail 150kg Ind	0.89m	2.89m	9312097061866	10.6kg
FS13753	Stairway Ladder 5 Step with Safety Rail 150kg Ind	1.11m	3.11m	9312097061873	12.7kg

NEED SPARES FOR YOUR BAILEY LADDER? **VISIT LADDERSPARES.COM.AU**

ATTIC LADDERS

ATTIC LADDER

ALUMINIUM LIGHTWEIGHT | **DOMESTIC** | **170KG**

- Designed for domestic applications
- Strong and stable aluminium construction
- Standard ceilings (2.34–3.12m) 170kg Domestic duty rating
- Gas struts provide easy and quiet opening
- Handrail included for additional comfort when climbing
- Wide opening for easy access
- Simple and easy to install

Product No.	Description	Nominal Size	Nominal Opening Dimensions	EAN Code	Nominal Weight
FS13560	AL Attic Ladder 170kg	2.34m — 3.12m	570 x 1370mm approx.	9312097058842	22.0kg

NEED SPARES FOR YOUR BAILEY LADDER? **VISIT LADDERSPARES.COM.AU**

ORDER PICKERS & ACCESS PLATFORMS

Note: Access Platform FS13591 shown

ORDER PICKING PLATFORMS
TEMPORARY WORK PLATFORM

ALUMINIUM LIGHTWEIGHT | **INDUSTRIAL** | **150KG**

BAILEY Ladderweld

- Industrial Duty Rated order picking ladder designed for use on commercial sites and warehouses
- 150kg load rating
- Light, strong aluminium construction with heavy duty stiles and tread
- Safety gate included as standard
- Rear Tilt-N-Go castors
- Large 600 X 500mm platform
- Box section back legs provide greater strength and rigidity
- Ideal for stock picking or industrial applications
- Spring loaded castors for ease of manoeuvrability
- Supplied flat packed with the tools required for assembly
- Made to Australian Standards AS1892

- Safety gate now a standard inclusion
- Supplied in flat pack assembly with detailed assembly instructions.

Product No.	Description	Nominal Platform Height	Nominal Max. Reach Height	EAN Code	Nominal Weight
FS13873	Order Picking Platform 2 MK3	0.55m	2.55m	9312097063112	20.0kg
FS13874	Order Picking Platform 3 MK3	0.82m	2.82m	9312097063129	22.1kg
FS13875	Order Picking Platform 4 MK3	1.10m	3.10m	9312097063136	24.0kg
FS13876	Order Picking Platform 5 MK3	1.38m	3.38m	9312097063143	25.9kg
FS13877	Order Picking Platform 6 MK3	1.65m	3.65m	9312097063150	28.5kg
FS13878	Order Picking Platform 7 MK3	1.93m	3.93m	9312097063167	30.5kg
FS13879	Order Picking Platform 8 MK3	2.20m	4.20m	9312097063174	32.7kg

SCAN TO VIEW ACCESS PLATFORMS VIDEO

SCAN TO VIEW ASSEMBLY VIDEO

Spare Parts

Please refer to pages 32–33 of this product guide.

LADDERWELD ACCESS PLATFORM
TEMPORARY WORK PLATFORM

ALUMINIUM LIGHTWEIGHT | **INDUSTRIAL** | **200KG**

BAILEY Ladderweld

- Super strong 'fully welded' design fabricated from heavy duty aluminium
- 100mm deep treads improve safety and comfort when climbing
- 'Walk thru' design for stock picking and access to mezzanine floors, vehicle access and warehousing
- Large 125mm wheels – improved portability and 'easy glide' action
- Large stable work platform (safe and stable) – 590mm x 800mm
- Manually operated braking system with high-vis powder coated activation arm helps minimize unauthorised access
- Toe board on three sides (helps secure tools/ accessories)
- Shelf included
- 200kg load rating
- Industrial duty rating for use on commercial sites
- Meets OH&S requirements (safety gate + 900mm handrail, toe board)
- Made to Australian Standards AS1892

Product Code	Description	Nominal Platform Height	Nominal Max. Reach Height	EAN Code	Nominal Fully Open Dimensions (WxD mm)	Nominal Weight
FS13591	Access Platform 3	828mm	2.8m	9312097059436	724 x 1168	38.1kg
FS13592	Access Platform 4	1104mm	3.1m	9312097059443	764 x 1309	40.6kg
FS13593	Access Platform 5	1381mm	3.4m	9312097059450	804 x 1451	43kg
FS13594	Access Platform 6	1656mm	3.7m	9312097059467	844 x 1592	46kg
FS13595	Access Platform 7	1933mm	3.9m	9312097059474	884 x 1733	48.5kg
FS13596	Access Platform 8	2209mm	4.2m	9312097059481	924 x 1875	51kg
FS13597	Access Platform 10	2761mm	4.8m	9312097059498	1003 x 2157	62kg
FS13598	Access Platform 12	3313mm	5.3m	9312097059504	1083 x 2440	69kg
FS13599	Access Platform 14	3866mm	5.9m	9312097059511	1164 x 2723	76.4kg

NEED SPARES FOR YOUR BAILEY LADDER? VISIT LADDERSPARES.COM.AU

MODULAR ACCESS/ PLATFORM SYSTEMS

1m Bridge Configuration

MODULAR ACCESS/ PLATFORM SYSTEMS

ALUMINIUM LIGHTWEIGHT | **INDUSTRIAL** | **200KG**

Introducing the brand new Modular Access System that will revolutionise safe access to heights when used in conjunction with the Bailey Access Platforms. The modular components allow you to design and build an access platform that is customised to your needs.

2m Bridge Configuration

BAILEY Ladderweld | MODULAR ACCESS SYSTEM

SCAN TO VIEW MAS VIDEO

SCAN TO VIEW ASSEMBLY VIDEO

- Modular system allows for unlimited types of configuration
- Fully welded frames and platforms with integrated toe boards
- Hand rails can be easily removed /reposition to allow clear access to the work space
- 600mm wide platforms for a safe work zone
- Strong 200kg load rating per bay
- Industrial duty - safe to use on a work site
- Lockable castors allow easy repositioning of the system
- Made to the Australian Standard AS1892

Combination variable height 1m & 2m Bridge Configuration

Product No.	Description	Size	Nominal Max. Reach Height	EAN Code	Nominal Weight
FS13789	Modular Access System 1.0m Platform	1.0m	N/A	9312097062238	16.5kg
FS13790	Modular Access System 2.0m Platform	2.0m	N/A	9312097062245	31.0kg
FS13791	Modular Access System 3 Step Upright	0.83m	2.8m	9312097062252	7.9kg
FS13792	Modular Access System 4 Step Upright	1.10m	3.1m	9312097062269	8.5kg
FS13793	Modular Access System 5 Step Upright	1.38m	3.4m	9312097062276	9.2kg
FS13794	Modular Access System 6 Step Upright	1.65m	3.6m	9312097062283	10.0kg
FS13855	**New!** Modular Access System Plus Platform	-	-	9312097062900	20.4kg
FS13856	**New!** Modular Access System Joiner Platform	-	-	9312097062917	8.6kg
FS13857	**New!** Modular Access System Plus Platform - Spreader		-	9312097062924	2.0kg

NEED SPARES FOR YOUR BAILEY LADDER? VISIT LADDERSPARES.COM.AU

MOBILE SCAFFOLDING

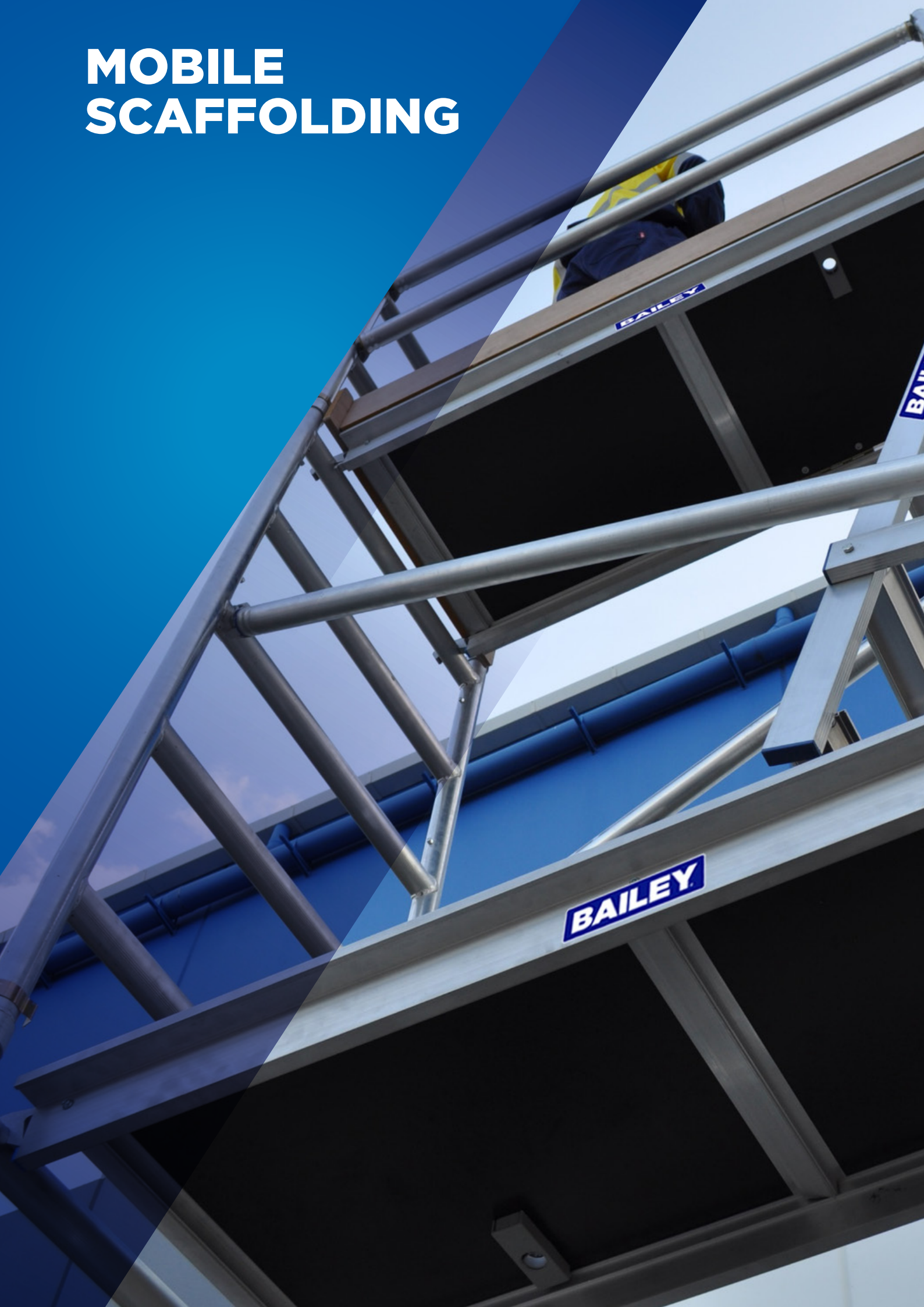

BAILEY
SUPA-LITE™
ALUMINIUM SCAFFOLD SYSTEM

SUPA-LITE ALUMINIUM SCAFFOLD SYSTEM
MOBILE SCAFFOLDING

ALUMINIUM LIGHTWEIGHT | **INDUSTRIAL** | **225** KG W.L.L.

- Tested and manufactured to AS/NZS 1576 Part 1 : 2010 and AS/NZS 1576 Part 3 : 2015
- 225kg Working Load Limit
- Lightweight aluminium construction
- Fully welded construction
- Highly portable (fits in most cars)
- DIY erection (no specialist assembly for working heights < 4 metres)
- Multiple safety features
- Full set of components increases reach height up to 5.4 metres
- Full set of spares available
- Wide, non-slip platform for working safely at heights
- Lockable 150mm industrial castors
- Exterior grade plywood platform with self-locking trapdoor
- Platform supported by aluminium sub-frame
- Wind lock prevents accidental uplift
- Adjustable height leg/ castors available as an accessory

SELECT THE RIGHT SCAFFOLD CONFIGURATION

PLATFORM HEIGHT	REACH HEIGHT*	BASE PACK FS13672	EXTENSION PACK FS13673	GUARD RAIL FS13674	TOEBOARD FS13676	LADDER FS13678	OUTRIGGER FS13677	HORIZONTAL BRACING FS13681	EXPANSION PACK FS13675
1.5m	3.5m	1		OPTIONAL	OPTIONAL		OPTIONAL		AVAILABLE
2.3m	4.3m	1	1		1	1	2	2	AVAILABLE
3.4m	5.4m	1	1	1	1	1	2		AVAILABLE

*Assumes a 1.70m person with a vertical 0.30m reach

CONFIGURATION 1A
PLATFORM HEIGHT 1.5m
Base Pack

CONFIGURATION 1B
PLATFORM HEIGHT 1.5m
Base Pack +
Guard Rail Pack

CONFIGURATION 2
PLATFORM HEIGHT 2.3m
Base Pack +
Extension Pack +
Ladder +
Horizontal Bracing +
Toe Boards +
Outrigger Pack

CONFIGURATION 3
PLATFORM HEIGHT 3.4m
Base Pack +
Extension Pack +
Guard Rail Pack +
Ladder +
Toe Boards +
Outrigger Pack

CONFIGURATION 4
PLATFORM HEIGHT 3.4m
Base Pack (2) +
Extension Pack (2) +
Guard Rail Pack (2) +
Ladder +
Toe Boards +
Expansion Pack

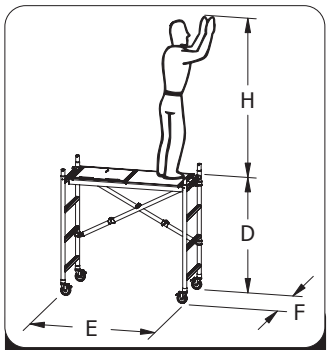

CONFIGURATION 1A

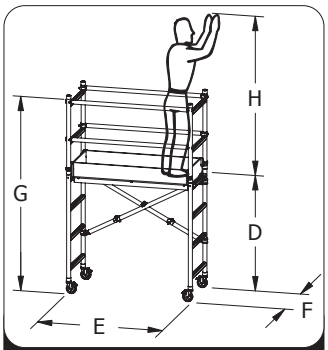

CONFIGURATION 1B

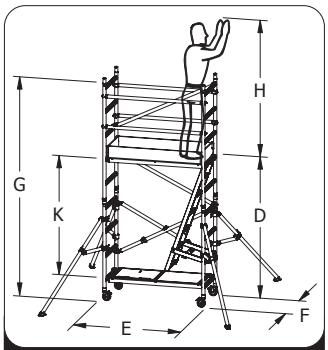

CONFIGURATION 2

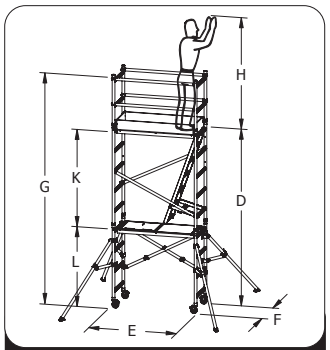

CONFIGURATION 3

Configuration	Pack Requirements	D (mm)	E (mm)	F (mm)	G (mm)	H (mm)	K (mm)	L (mm)
1A	Base Pack	1500	1623	752	N/A	3500	N/A	N/A
1B	Base + Guardrail Packs	1500	1623	752	2500	3500	N/A	N/A
2	Base Pack + Extension Pack + Ladder + Horizontal Bracing + Toe Boards + Outrigger Pack	2300	1623	752	3300	4300	1910	N/A
3	Base Pack + Extension Pack + Guard Rail Pack + Ladder + Toe Boards + Outrigger Pack	3400	1623	752	4400	5400	1910	1500

NEED SPARES FOR YOUR BAILEY LADDER? VISIT LADDERSPARES.COM.AU

BAILEY Ladderweld

LADDERWELD ACCESS PLATFORM
TEMPORARY WORK PLATFORM
SPARE PARTS DIAGRAM

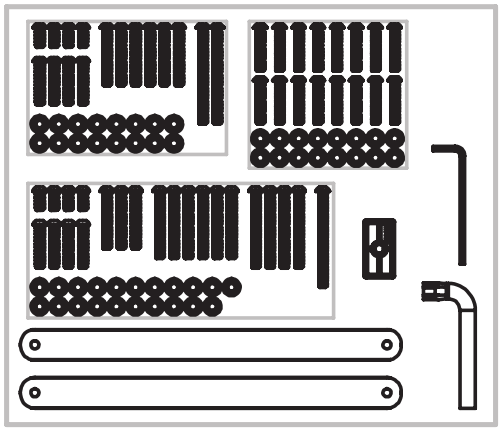

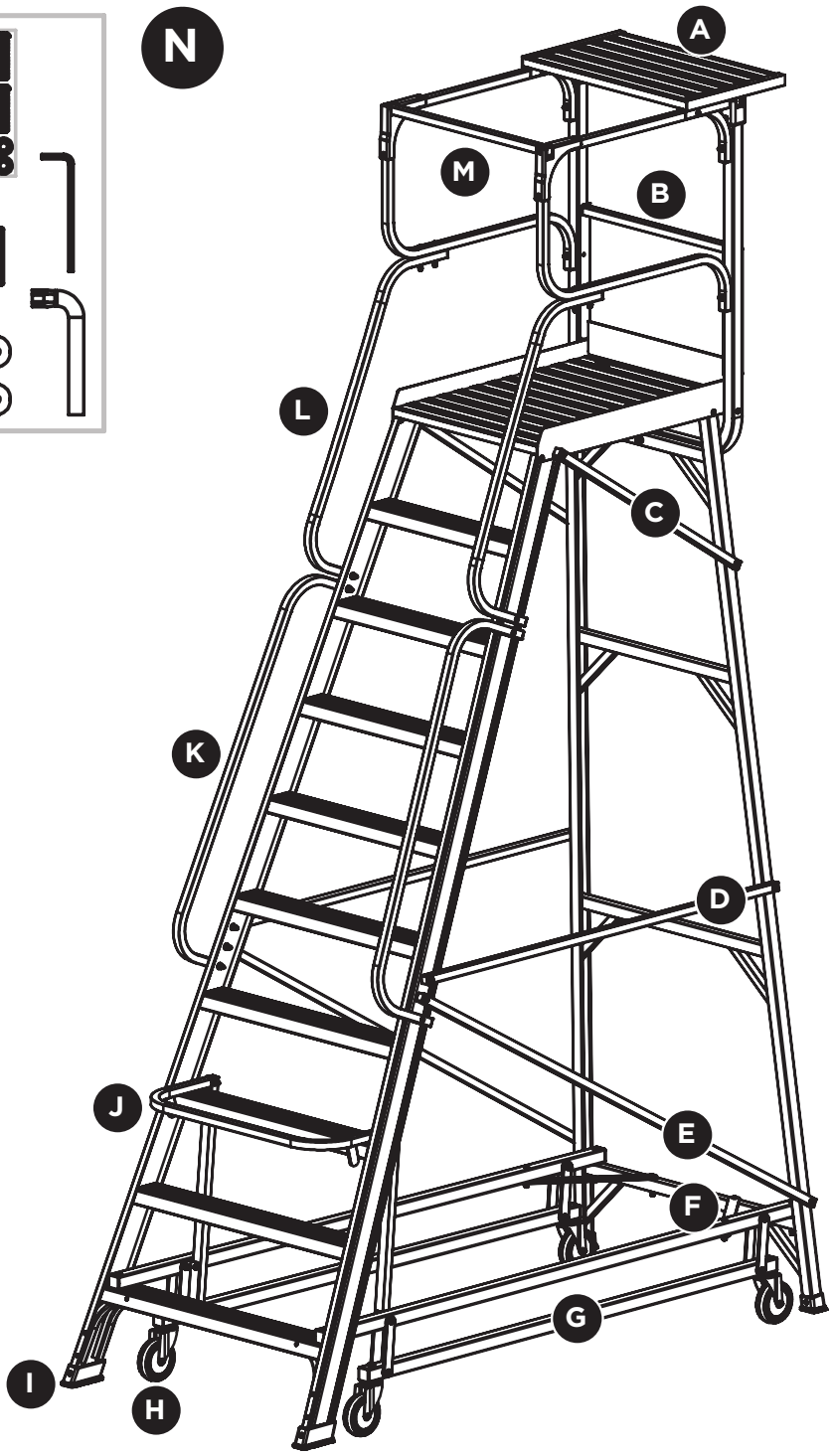

SCAN TO VIEW ACCESS PLATFORMS VIDEO

SCAN TO VIEW ASSEMBLY VIDEO

LADDERWELD ACCESS PLATFORM
TEMPORARY WORK PLATFORM
SPARE PARTS LIST

A

Shelf
SP45-004AZ

B

Rear Panel
SP45-008AZ

C

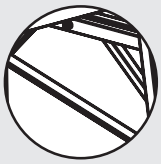

Top
Diagonal Braces (x2)
SP45-009AZ

D

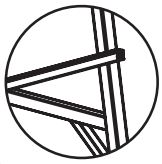

Horizontal Braces (x2)
(Access Platform 10-14)
SP45-010AZ

E

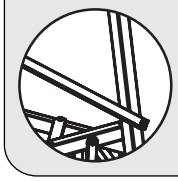

Bottom
Diagonal Braces (x2)
(Access Platform 10-14)
SP45-011AZ

F

Plan Braces (x2)
SP45-012AZ

G

Wheel System
(RHS & LHS)

Access Plat. 3	SP45-013AZ
Access Plat. 4	SP45-014AZ
Access Plat. 5	SP45-015AZ
Access Plat. 6	SP45-016AZ
Access Plat. 7	SP45-017AZ
Access Plat. 8	SP45-018AZ
Access Plat. 10	SP45-019AZ
Access Plat. 12	SP45-020AZ
Access Plat. 14	SP45-021AZ

H

Castors (x4)
SP45-031AZ

I

Feet
(Front & Rear)
SP45-032AZ

J

Handle and Handlevers

Access Plat. 3	SP45-022AZ
Access Plat. 4	SP45-023AZ
Access Plat. 5	SP45-024AZ
Access Plat. 6	SP45-025AZ
Access Plat. 7	SP45-026AZ
Access Plat. 8	SP45-027AZ
Access Plat. 10	SP45-028AZ
Access Plat. 12	SP45-029AZ
Access Plat. 14	SP45-030AZ

K

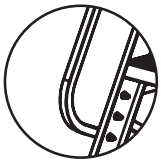

Lower Handrails (x2)
(Access Platform 10-14)
SP45-007AZ

L

Lower Handrails (x2)
(Access Platform 10-14)
SP45-007AZ

M

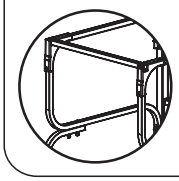

RH Top Handrail
LH Top Handrail
Safety Gates (x2)
SP45-005AZ

N

Component Kit
SP45-03AZ

NEED SPARES FOR YOUR BAILEY LADDER? **VISIT LADDERSPARES.COM.AU**

Item Number	Product Description	Page No.
FS13985	Pro FG FSE6 150kg Ind Punchlock® (1.8m/3.2m)	15
FS13986	Pro FG FSE7 150kg Ind Punchlock® (2.1m/3.8m)	15
FS13987	Pro FG FSE8 150kg Ind Punchlock® (2.4m/4.1m)	15
FS13977	Pro FG Double Sided 3	10
FS13978	Pro FG Double Sided 4	10
FS13980	Pro FG Double Sided 6	10
FS13981	Pro FG Double Sided 7	10
FS13982	Pro FG Double Sided 8	10
FS13983	Pro FG Double Sided 10	10
FS13984	Pro FG Double Sided 12	10
FS13972	Pro FG Single Sided 6 150kg	8
FS13973	Pro FG Single Sided 7 150kg	8
FS13974	Pro FG Single Sided 8 150kg	8
FS13975	Pro FG Single Sided 10 150kg	8
FS13976	Pro FG Single Sided 12 150kg	8
FS13945	Pro FG Platform Ladder 2	23
FS13946	Pro FG Platform Ladder 3	23
FS13947	Pro FG Platform Ladder 4	23
FS13948	Pro FG Platform Ladder 5	23
FS13949	Pro FG Platform Ladder 6	23
FS13950	Pro FG Platform Ladder 7	23
FS13951	Pro FG Platform Ladder 8	23
FS13873	AL Order Picking Platform 2 MK3 150kg IND Ladderweld (Platform Height: 0.55m)	28
FS13874	AL Order Picking Platform 3 MK3 150kg IND Ladderweld (Platform Height: 0.82m)	28
FS13875	AL Order Picking Platform 4 MK3 150kg IND Ladderweld (Platform Height: 1.10m)	28
FS13876	AL Order Picking Platform 5 MK3 150kg IND Ladderweld (Platform Height: 1.38m)	28
FS13877	AL Order Picking Platform 6 MK3 150kg IND Ladderweld (Platform Height: 1.65m)	28
FS13878	AL Order Picking Platform 7 MK3 150kg IND Ladderweld (Platform Height: 1.93m)	28
FS13878	AL Order Picking Platform 8 MK3 150kg IND Ladderweld (Platform Height: 2.20m)	28
FS13957	Pro AL Single Sided 6 150kg	8
FS13959	Pro AL Single Sided 8 150kg	8
FS13960	Pro AL Double Sided 3 150kg	10
FS13961	Pro AL Double Sided 4 150kg	10
FS13963	Pro AL Double Sided 6 150kg	10
FS13965	Pro AL Double Sided 8 150kg	10
FS13966	Pro AL Doube Sided Big Top 3 150kg	9
FS13967	Pro AL Doube Sided Big Top 4 150kg	9
FS13988	Pro AL DP6 150kg Ind Punchlock® - 1.8m/3.2m	14
FS13989	Pro AL DP7 150kg Ind Punchlock® - 2.1m/3.8m	14
FS13990	Pro AL DP8 150kg Ind Punchlock® - 2.4m/4.4m	14
FS13931	Pro AL Platform Ladder 2	21
FS13932	Pro AL Platform Ladder 3	21
FS13933	Pro AL Platform Ladder 4	21
FS13934	Pro AL Platform Ladder 5	21
FS13935	Pro AL Platform Ladder 6	21
FS13428	Trade AL DS3 150kg Ind Riveted - 0.9m	9
FS13429	Trade AL DS4 150kg Ind Riveted - 1.2m	9
FS13430	Trade AL DS6 150kg Ind Riveted - 1.8m	9
FS13431	Trade AL DS8 150kg Ind Riveted - 2.4m	9
FS13432	Trade AL DP6 150kg Ind Riveted - 1.8m/3.2m	14
FS13433	Trade AL DP7 150kg Ind Riveted - 2.1m/3.8m	14
FS13434	Trade AL DP8 150kg Ind Riveted - 2.4m/4.4m	14
FS13530	FG P170-3 170kg Ind Job Station	23
FS13531	FG P170-4 170kg Ind Job Station	23
FS13532	FG P170-5 170kg Ind Job Station	23
FS13533	FG P170-6 170kg Ind Job Station	23
FS13534	FG P170-7 170kg Ind Job Station	23
FS13535	FG P170-8 170kg Ind Job Station	23
FS13536	FG P170-10 170kg Ind Job Station	23
FS13537	FG P170-12 170kg Ind Job Station	23
FS13538	AL P170-3 170kg Ind Job Station	21
FS13539	AL P170-4 170kg Ind Job Station	21
FS13540	AL P170-5 170kg Ind Job Station	21
FS13541	AL P170-6 170kg Ind Job Station	21
FS13542	AL P170-7 170kg Ind Job Station	21
FS13543	AL P170-8 170kg Ind Job Station	21
FS13544	AL P170-10 170kg Ind Job Station	21
FS13545	AL P170-12 170kg Ind Job Station	21

NEED SPARES FOR YOUR BAILEY LADDER? **VISIT LADDERSPARES.COM.AU**

Item Number	Product Description	Page No.
FS13908	Bailey Triple Ext 6/14 150kg Ind	17
FS13560	Dom 170kg Aluminium Folding Attic Ladder - (2.34m/3.12m)	26
FS13576	HD FG P150-3 150kg Ind Riveted	24
FS13577	HD FG P150-4 150kg Ind Riveted	24
FS13578	HD FG P150-5 150kg Ind Riveted	24
FS13579	HD FG P150-6 150kg Ind Riveted	24
FS13580	HD AL P150-3 150kg Ind Riveted	22
FS13581	HD AL P150-4 150kg Ind Riveted	22
FS13582	HD AL P150-5 150kg Ind Riveted	22
FS13583	HD AL P150-6 150kg Ind Riveted	22
FS13584	Castor Kit - P150	22
FS13936	Pro AL Platform Ladder 7	21
FS13937	Pro AL Platform Ladder 8	21
FS13591	Access Platform 3 170kg Ind (Platform Height 828mm)	28
FS13592	Access Platform 4 170kg Ind (Platform Height 1104mm)	28
FS13593	Access Platform 5 170kg Ind (Platform Height 1381mm)	28
FS13594	Access Platform 6 170kg Ind (Platform Height 1656mm)	28
FS13595	Access Platform 7 170kg Ind (Platform Height 1933mm)	28
FS13596	Access Platform 8 170kg Ind (Platform Height 2209mm)	28
FS13597	Access Platform 10 170kg Ind (Platform Height 2761mm)	28
FS13598	Access Platform 12 170kg Ind (Platform Height 3313mm)	28
FS13599	Access Platform 14 170kg Ind (Platform Height 3866mm)	28
FS13890	Pro AL Single 7 150kg Ind Punchlock®	19
FS13891	Pro AL Single 9 150kg Ind Punchlock®	19
FS13892	Pro AL Single 11 150kg Ind Punchlock®	19
FS13893	Pro AL Single 13 150kg Ind Punchlock®	19
FS13897	Pro AL Ext 8 150kg Ind Punchlock®	18
FS13898	Pro AL Ext 10 150kg Ind Punchlock®	18
FS13899	Pro AL Ext 12 150kg Ind Punchlock®	18
FS13900	Pro AL Ext 14 150kg Ind Punchlock®	18
FS13901	Pro AL Ext 16 150kg Ind Punchlock®	18
FS13902	Pro AL Ext 18 150kg Ind Punchlock®	18
FS13903	Pro AL Ext 20 150kg Ind Punchlock®	18
FS13905	Pro AL Ext 10 Leveller 150kg Ind Punchlock®	17
FS13906	Pro AL Ext 12 Leveller 150kg Ind Punchlock®	17
FS13644	BXS20 2.3m/4.5m (7'6"/14'8") - 135kg	11
FS13647	PFS Narrow Safety Gate Kit (suits Bailey Pro-Punchlock & P150 models)	24
FS13648	PFS Wide Safety Gate Kit (suits Bailey P170 models)	24
FS13668	HD FG DP6 with V Rung 150kg Riveted - 1.8m/3.2m	15
FS13669	HD FG DP7 with V Rung 150kg Riveted - 2.1m/3.8m	15
FS13670	HD FG DP8 with V Rung 150kg Riveted - 2.4m/4.4m	15
FS13672	SUPA-LITE AL Scaffold System - Base Pack	31
FS13673	SUPA-LITE AL Scaffold System - Extension Pack	31
FS13674	SUPA-LITE AL Scaffold System - Guardrail Pack	31
FS13675	SUPA-LITE AL Scaffold System - Expansion Pack	31
FS13676	SUPA-LITE AL Scaffold System - Toe Board Pack	31
FS13677	SUPA-LITE AL Scaffold System - Outrigger Pack (X2)	31
FS13678	SUPA-LITE AL Scaffold System - Ladder	31
FS13679	SUPA-LITE AL Scaffold System - Adjustable Legs (X2)	31
FS13680	SUPA-LITE AL Scaffold System - Spigot Pack (X4)	31
FS13681	SUPA-LITE AL Scaffold System - Horizontal Brace (X2)	31
FS13682	SUPA-LITE AL Scaffold System - Diagonal Brace (X2)	31
FS13683	SUPA-LITE AL Scaffold System - Platform (X1)	31
FS13750	Stairway Ladder 2 Step with Safety Rail 150kg Ind	25
FS13751	Stairway Ladder 3 Step with Safety Rail 150kg Ind	25
FS13752	Stairway Ladder 4 Step with Safety Rail 150kg Ind	25
FS13753	Stairway Ladder 5 Step with Safety Rail 150kg Ind	25
FS13789	Modular Access System 1.0m Platform	29
FS13790	Modular Access System 2.0m Platform	29
FS13791	Modular Access System 3 Step Upright	29
FS13792	Modular Access System 4 Step Upright	29
FS13793	Modular Access System 5 Step Upright	29
FS13794	Modular Access System 6 Step Upright	29
FS13855	Modular Access System Plus Platform	29
FS13856	Modular Access System Joiner Platform	29
FS13857	Modular Access System Plus Platform Spreader	29
FS13862	AL-SLS 3 IN 1 (6/9 Step) 1.8m 150kg Ind	12
FS13863	AL-SLS 3 IN 1 (7/11 Step) 2.1m 150kg Ind	12

NEED SPARES FOR YOUR BAILEY LADDER? **VISIT LADDERSPARES.COM.AU**

Item Number	Product Description	Page No.
FS13864	AL-SLS 3 IN 1 (8/14 Step) 2.4m 150kg Ind	12
FS13884	FG-SLS 3 IN 1 (6/9 Step) 1.8m 150kg Ind	12
FS13885	FG-SLS 3 IN 1 (7/11 Step) 2.1m 150kg Ind	12
FS13886	FG-SLS 3 IN 1 (8/14 Step) 2.4m 150kg Ind	12
FS13868	Retail Platform Step Stool 2 - 120kg Ind	22
FS13869	Retail Platform Step Stool 3 - 120kg Ind	22
FS13870	Retail Platform Step Stool 4 - 120kg Ind	22
FS13909	Pro FG FXN Ext 8 Vee 150kg Ind Punchlock®	18
FS13910	Pro FG FXN Ext 10 Vee 150kg Ind Punchlock®	18
FS13911	Pro FG FXN Ext 12 Vee 150kg Ind Punchlock®	18
FS13912	Pro FG FXN Ext 14 Vee 150kg Ind Punchlock®	18
FS13913	Pro FG FXN Ext 16 Vee 140kg Ind Punchlock®	18
FS13914	Pro FG FXN Ext 18 Vee 140kg Ind Punchlock®	18
FS13917	Pro FG FSXN Ext 8 Vee 150kg Ind Punchlock®	19
FS13918	Pro FG FSXN Ext 10 Vee 150kg Ind Punchlock®	19
FS13919	Pro FG FSXN Ext 12 Vee 150kg Ind Punchlock®	19
FS13920	Pro FG FSXN Ext 14 Vee 150kg Ind Punchlock®	19
FS13921	Pro FG FSXN Ext 16 Vee 140kg Ind Punchlock®	19

NEED SPARES FOR YOUR BAILEY LADDER? **VISIT LADDERSPARES.COM.AU**

NOTES

NEED SPARES FOR YOUR BAILEY LADDER? **VISIT LADDERSPARES.COM.AU**

NOTES

NEED SPARES FOR YOUR BAILEY LADDER? **VISIT LADDERSPARES.COM.AU**

ladderspares.com.au

FINALLY, WE MADE FINDING 'LADDER SPARE PARTS' EASY!

TO IDENTIFY WHICH SPARES ARE AVAILABLE, SIMPLY LOGIN TO WWW.LADDERSPARES.COM.AU AND FOLLOW THE PROMPTS.

SCAN TO VISIT OUR NEW WEBSITE

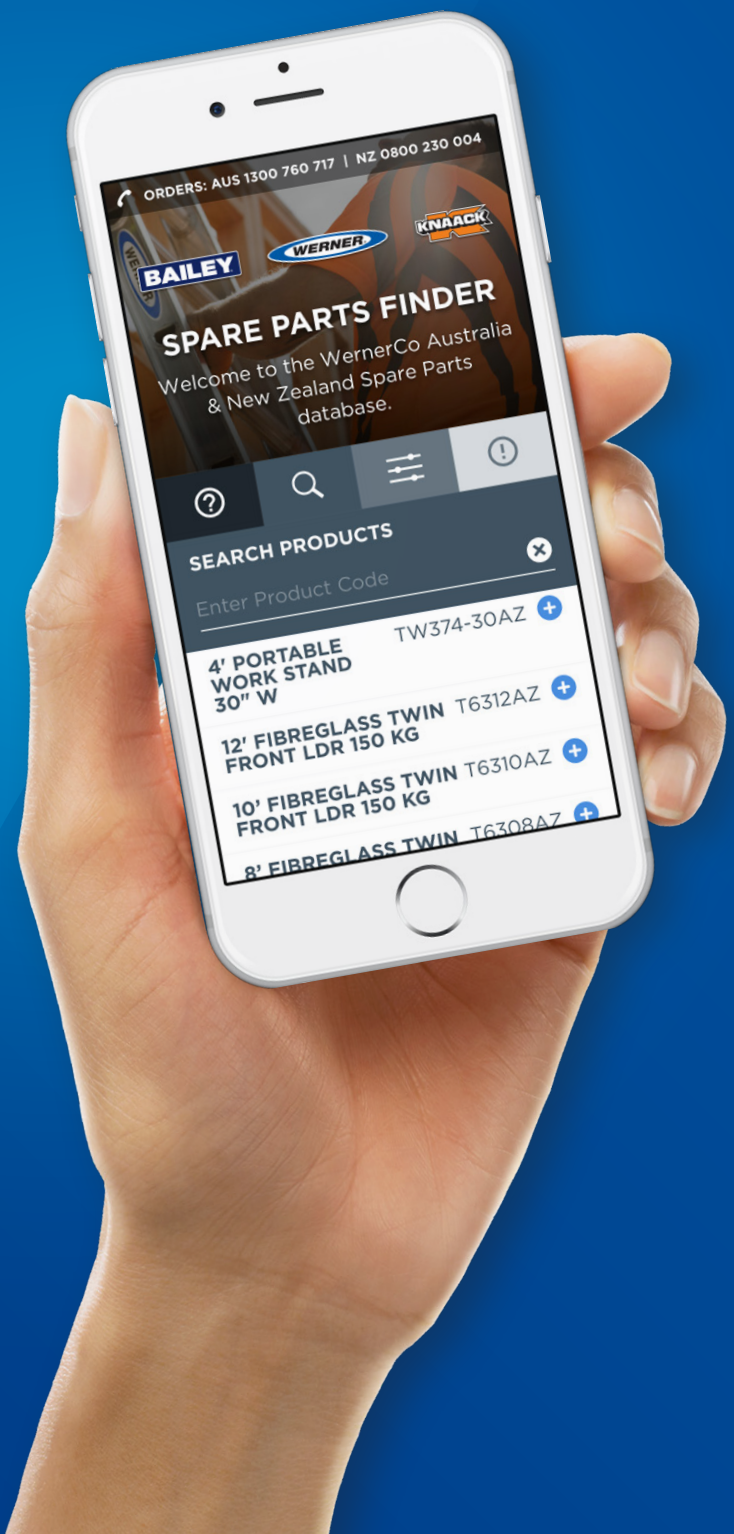

HOW TO FIND SPARE PARTS

Step 1
Scan this QR code using your smart phone or login to www.ladderspares.com.au

Step 2
If you know the actual code of the ladder, enter this into the 'Enter Product Code' cell.

If you don't know the code, continue using the search criteria below this field.

Step 3
Select the ladder brand (Bailey, Werner, Knaack, etc).

Step 4
Select the ladder type or design.
For example, a double sided stepladder

Step 5
What material is the ladder made from?
For example, fibreglass or aluminium

Step 6
Is the ladder riveted or Punchlock?

Step 7
What size is the ladder? Count the number of treads or rungs, Eg. 6 foot

Step 8
Select the Load Rating of the ladder (100-170kg).

BAILEY

FOR FURTHER INFORMATION, PLEASE CONTACT OUR CUSTOMER CARE CENTRE 1300 760 717

BAILEYLADDERS.COM.AU

Orders: AUS.Orders@wernerco.com
Claims: AUS.RMA@wernerco.com

WERNERCO™

WernerCo Australia Pty Ltd A.B.N. 88 151 127 061

All details in this brochure are correct at time of printing. WernerCo Australia reserves the right to alter product specifications at any time without notice.

Doc No. DOC20.0116 ©2021 Werner Co. BAI 052021